SANITARY WARE

جسر أبحر للأدوات الصحية





CATALOGUE 2026

WELCOME TO THE JOY OF OB



FIND OUT MORE

Shower Rain



30cm Round Hesanit
S4002-30



21cm Tempesta GROHE
2641000D

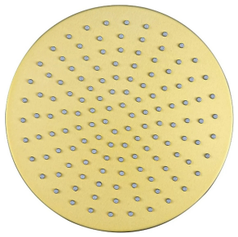

30cm Gold Round / HESANIT
4002GOLD



40 cm Round/ HESANIT
S4002-40



25*25 Tempesta GROHE
26685000



Tempesta Cosmopolitan 200
27541001



Croma 220 EcoSmart
26465000



50cm Round Dona
D001



40*40cm Square /DONA
D003-1001



25 cm Tempesta Grohe
2666600D



40cm Round Black Lima
0104B



Euphoria 260 3 sprays Grohe
2645700D

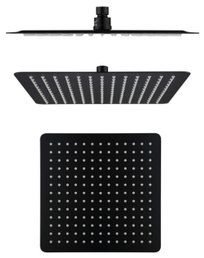

20/30/40 cm
head shower black square

Mounted Pipe



Chrome Wall Mounted Pipe
40 cm Grohe
27851000



30 cm square pipe chrome
roof (overhead)
5133-70



OB Square Wall Pipe
68030204



40cm OB Round Wall Pipe Black
68030104B



30 cm square pipe
black roof (top)
5141



OB pipe 30 cm gold roof
5125-130



45cm German Ceiling
Square Pipe
80450



Round Chrome Wall Pipe
TREDEX
TRF0033



Square Pipe Roof (Top) 15 cm
Hesanit
80150



Round Pipe of the Roof **45** cm
German made
40450



Quaranta (made in italy)



HOW DO YOU TURN A SHOWER INTO PURE BLISS?

GROHE

Euro-Smart



Eurosmart
Single-lever shower mixer
194512433



Eurosmart
single-lever shower mixer
194502433



Eurosmart
Single-lever shower mixer
19451003



Eurosmart
single-lever shower mixer
19450003



Eurosmart
Single-lever shower mixer
33556002 1/2″



Eurosmart
single-lever shower mixer
33305003 1/2″



Eurosmart
Single-lever shower mixer
19451002



Eurosmart
Single-lever shower mixer
3320230D



Eurosmart
Single-lever mixer
33300003 1/2″



Eurosmart Standard
Single-lever shower mixer
33300002 1/2″



Eurosmart
Single-lever mixer
33555003 1/2″

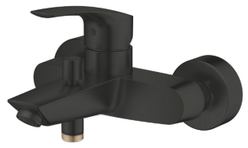

Eurosmart
Single-lever mixer



Eurosmart
Single-lever mixer
3328130D 1/2″



Eurosmart Standard
Single-lever mixer
30305000 1/2″



Eurosmart
Single-lever mixer
32482002 1/2″



Eurosmart
Single-lever
30567243D



Eurosmart
Single-lever mixer
33265243D 1/2″



Eurosmart
Single-lever mixer
3326530D 1/2″



Eurosmart
E Infra-red basin
3632510D 1/2″



Eurosmart
Standard
23322001



Eurosmart
Single-lever
33202243D

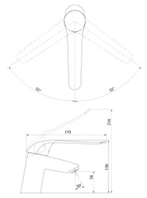

Euro

Smart

MADE IN GERMANY

GROHE
Pure Freude an Wasser

MADE IN GERMANY

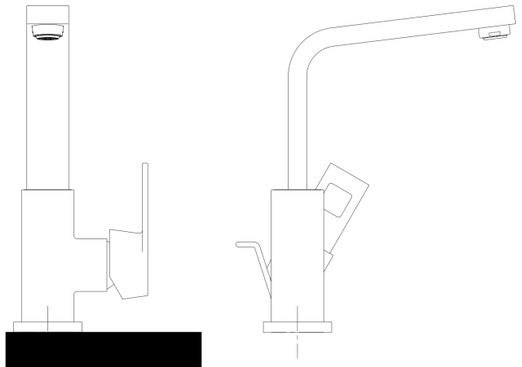

Euro

cube

GROHE

Pure Freude an Wasser

GROHE

Eurocube



Eurocube Single-lever basin mixer 1/2″ L-Size
23135000



Eurocube Single-lever basin mixer 1/2″ XL-Size
23406000



Eurocube Single-lever Sink mixer 1/2″
31255000



Eurocube Single-lever Sink mixer 1/2″ M-Size
23445000



Eurocube Single-lever Bath mixer
19898000



Eurocube Single-lever Bath mixer
19896000



Eurocube Single-lever Bath mixer
24062000



Euphoria Cube Stick
27702000



Eurocube Single-lever bath mixer 1/2″
23140000



Essentials Cube Bad-Set 5 in 1
40758001

OB

GROHE

Cosmo | BauCosmo



Eurocosmo Single-lever basin mixer 1/2″ M-Size
23325ALC



Eurocosmo
Single-lever bath mixer 1/2″
32831AL0



BauCosmopolitan
Bath spout
32831AL0



Eurosmart **Cosmopolitan**
1/2″ XL-Size
23921000



BauCosmopolitan
Bath spout with diverter
13425001



BauCosmopolitan
Bath spout
13255001



Tempesta Cosmopolitan
200 Head shower 1 spray
27541001



Eurocosmo
Single-lever bath mixer
19382000



Tempesta Cosmopolitan
100 Shower rail set 4 sprays
19382000



Tempesta Cosmopolitan
100 Shower rail set 4 sprays
27577001



Eurosmart Cosmopolitan
1/2″ M-Size
23325000

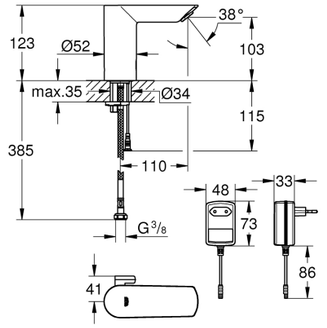

MADE IN GERMANY

Bau

Cosmo

GROHE
Pure Freude an Wasser

MADE IN GERMANY

Bau Cosmo

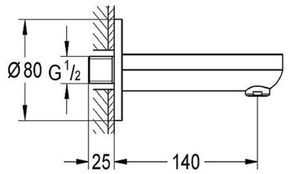

GROHE

Pure Freude an Wasser

GROHE



Eurosmart Cosmopolitan 1/2″
32831000



Eurocosmo Single-lever shower mixer
19383000



BauContemporary Bath spout with diverter
13390000



Eurosmart Cosmopolitan 1/2″
13390000

OB

Follow the rhythm

GROHE

SMART BOX





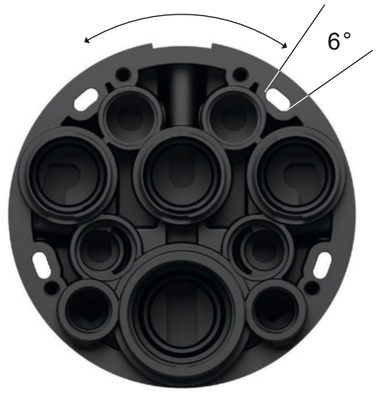

Rapido SmartBox

Universal rough-in box, 1/2″

35600000

SUBSEQUENTLY ADJUSTABLE UP TO SIX DEGREES
Doing a perfect job comes down to getting even the smallest detail perfect. And once a job is finished, it's usually hard to adjust mistakes. Not with the GROHE wall plates. They can be subsequently adjusted by up to six degrees – thanks to slotted holes in the function unit – to allow for perfect alignment with tiles and tile joints. No drilling, no risk of damage. Just a job well done.

Whether you are installing GROHE SmartControl, GROHE single lever mixers or GROHE two-handle thermostats, they all offer this small, but all-important advantage.

SUBSEQUENTLY ADJUSTABLE

COMES WITH ALL TRIM TYPES

GROHE SMARTCONTROL
FEATURES AT A GLANCE





GROHE
Pure Freude an Wasser

MADE IN GERMANY

OB

Pure Freude an Wasser

GROHE

new



MASTERPIECE OF TECHNOLOGY

GROHE RAPIDO SMARTBOX SYSTEM

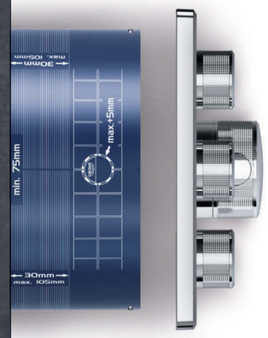



SLIM IS THE NEW BEAUTIFUL

10 mm

Original Size 1:1

43 mm

43 MM TOTAL OUTREACH

No matter what the installation depth of the rough-in is, the total height of the trim never exceeds 43 mm. The GROHE SmartControl Concealed combines space-saving convenience in the shower and slim good looks.

THINNER WALL PLATES

With a height of only 10 mm, its super slim design makes the GROHE SmartControl Concealed wall plate both elegant and space saving.

HIDDEN SEALING SYSTEM

The GROHE SmartControl Concealed has an integrated sealing system, completely eliminating water behind the wall.

SYMBOLS CAN BE CHANGED

The control knobs come with a range of different symbols, representing the different shower options. These symbols are clear and recognisable and their functionality distinct. They can be individually configured and also easily exchanged if required.



43 MM
SLIM
DESIGN



GROHE

Pure Freude an Wasser

Modernes WC

GROHE
Pure Freude an Wasser

GROHE

WC



Rapid SL 3-in-1 set for WC

3877202D

SAUDI MADE



Rapid SL 3-in-1 set for WC

3877201D Poland Made



Rapid SL 3-in-1 set for WC **1.13 m**

3872100D



Flushing cistern GD 2

38661000



Uniset 3-in-1 set for WC

3945200D



Inspection shaft

66783000



Skate Air

Flush plate

38505000



Skate Cosmopolitan

Flush plate

38505000



Skate Cosmopolitan

Flush plate

38732GN0



Skate Cosmopolitan

Flush plate

38732AL0



Skate Air

Flush plate

38505KF0



Infra-red electronic

Flush plate

38698SD1



Skate Cosmopolitan

Flush plate

38732KF0



Tectron Skate Infra-red electronic

Flush plate

37419SD0

OB





PP-outlet bend Ø 90 mm
42327000



4" outlet adaptor
42242000



Support For Outlet
42243000



WC inlet and outlet connecting set
37311K00



Dual Flush discharge valve AV1
42320000



Connecting hose
42233000



Threaded screw
4276400M



Servo-set
37078PI0



Filling valve
37095000



Valve seat for GD2
42315000



Discover Roca's latest bathroom collections, products and cutting-edge technologies presented at OB

Roca



Roca



Debba

Roca

Debba



Roca Debba
Dual flush 4.5/3L
A34 199 1000



Debba
Soft-closing seat
A346997000
A8019D2004



Square
Close-coupled WC
vertical outlet
034s9998000



Wall-hung basin
A325994000
(600 x 480 x 150 mm)



Wall-hung basin with fixing kit
A325995000 (550 x 170)



Double Short Push Button
AH0001800R



Wall-hung ceramic basin with fixing kit
A325995000 (550 x 170)



Seat and cover for toilet (445 x 364 x 51 mm)
A8019D0004



Complete WC Mechanism
AH0004200R

OB













Roca



Roca

Dama



Roca Dama-N
A3 42 78 L000



Dama-N
34678L000- A801782004



Dama-N
346787000- A801782004



Dual Flush Push Button
with Threaded Rods
AH0001700R





Roca

The Gap



The Gap
03 4247 8000



The Gap
A34647L000-M
A80147200B



The Gap
compact basin
0327478000



The Gap basin 55cm
327475000-337470000



The Gap basin 55cm
327475000 - 337471000



The Gap wall hung WC
347477000-A80147200B



The Gap
Semi-recessed basin
032747S000



The Gap corner WH basin
032747R000

OB

Roca

Ona



Wall-hung Roca Rimless® WC

A346687000



Altherr Desile Park

Altherr Desile Park is a Barcelona-based design studio specialising in product and colour design, creative direction and ephemeral architecture for internationally renowned furniture and interior design companies.
They work with an open and sensitive conceptualisation process that results in timeless, elegant and welcoming projects.
Their integral design vision consistently combines interculturality, sustainability and a deep care for details, materials and colours.

“We approach projects from an engaged and complex perspective, bringing together culture and technology to convey naturalness, balance and humanity.”

“Inspired by the invisible line that separates light from shadow, Meridian reflects the perfect balance that adapts to the changing light throughout the day.”

New Collection

Roca

Meridian



Roca Meridian
03 4224 b000



Meridian Accessible
034224H000-034124H000-A80123A004



wall-hung Rimless WC with horizontal outlet
(Hidden fixations) 360 x 560 x 400 mm
A34624L000

OB

Roca

Inspira



Inspira Square

346537000 - 080153200B



Inspira

080153200B-A347537000



Inspira close-coupled WC

(375 x 645 x 794 mm)

346537000 - 080153200B

OB





Carmen

Roca

Carmen



toilet for concealed cistern

A801B5200B-A3440A9000



Carmen close-coupled WC

A3420A7560-A3410A1560-A801B5256B



Carmen wc toilet for concealed cistern

A3440A9560-A801B5256B



Carmen close-coupled WC

A801B5238B - A3410A1000 -A3420A7000



Rimless Back To Wall

A3570A4560-A806B5056B



Carmen wall built-in basin mixer

A5A474BC00


Roca



Loft-E - Electronic one-water basin mixer with high spout
A5A3143C00



Victoria - Wall mounted kitchen sink mixer with swivel spout
A5A7625C00



Alfa - Basin mixer with pop-up waste. Cold Start
A5A3P25C00



Wall-mounted bath-shower mixer with automatic diverter, handshower 1,70 m
A5A0125C02



Monodin - Wall-mounted bath-shower mixer with automatic diverter
A5A0298C00



Esmai bath-shower Mixer
A5A0231C00



Atlas - Built-in shower mixer (1 way).
A5A2B90C00

Roca

Mixers



Victoria - Adjustable Thermostatic Shower Column
A5A2018C00



M - BASIC - Single lever shower column
A5A9725C00



Nina - Single lever medium height basin mixer
A5A3996C0R



Basin mixer with pop-up waste.
A5A9725C00



Carmen - Built-in twin-lever basin mixer
A5A474BC00

Innovation in
Every Detail

Ideal Standard

Ideal Standard

Ideal Mixers



Ceraflex
bath&shower mixer
A6758AA



Ceraflex
bath&shower mixer
A6757AA



Cerafine O
bath&shower mixer
A7193AA



Cerafine D
bath&shower mixer
A7189AA



Ceraflex
Exposed shower mixer
B1720AA



Ceraflex
Wall-Mount Single-Lever Mixer Tap
B0726AA



Cerafine O
Exposed shower mixer
BC499XG



Ceraflex
bath&shower mixer
B1722AA



Cerafine Model D
Exposed shower mixer
BC692AA



Cerafine O
Wall-Mount Mixer
BC500XG



Idealrain
Rainshower
B9436AA



IdealSpray
B0924AA



Shower wall elbow
BC808AA



Shower wall elbow
BC772AA



CERALOOK
BC176AA



Ceraline
A6938AA



Ceraflex
B1713AA



Ceraflex
B1872AA



Cerafine Model O
BC699AA



Ceralook
BC302AA

Drains



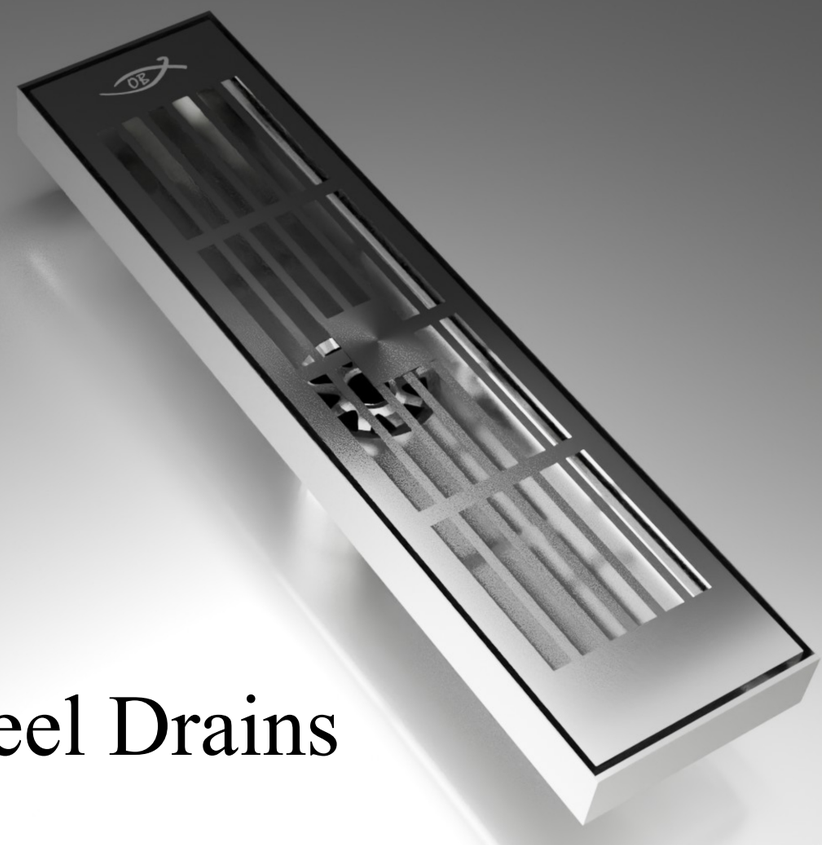

Stainless Steel Drains

Customer Guide

Stainless steel drains offer a reliable & durable solution for wastewater management in your home or business.
With their corrosion resistance, durability, and aesthetic appeal, they are an excellent investment.
By following the installation and maintenance guidelines provided in this guide,
you can ensure that your stainless steel drains perform optimally for years to come.

Product Overview: High-quality stainless steel drains designed for durability and aesthetics.
Key Features: Corrosion resistance, durability, aesthetic appeal, hygienic surface.
Installation Tips: Follow these steps for a successful installation.
Maintenance Tips: Regular cleaning and inspections to keep your drains in top condition.
Technical Specifications: Available in various sizes and finishes to suit your needs.

For more information, visit our website or contact our customer support team.



Easy Drain shower drains are supplied as a complete set and have just a few parts which enables a quick and easy installation. By using our comprehensive installation manuals, assembling an Easy Drain is completed in a matter of seconds.

Floor Drain, Rectangular Stainless Steel 201248 NEW





Specifications
Shower drainage channel made of high quality stainless steel, to avoid any type of corrosion. Designed to be embedded in the shower floor, 2 in 1 central tray. You can use the included stainless steel gutter or install the same ceramic as the floor, remaining fully integrated It includes a closing system to prevent bad odors from the sewer.
Ideal for installation in bathrooms, showers, patios, terraces, balconies, garages or any other place that requires fast drainage.

Item No.	DESCRIPTION
201248	Type 304 (CF8) Stainless Steel Drain 30x8 cm & 2in1 central tray
	SPECIFY DRAIN SIZE IN CENTIMETER
Drain Width	8.2 Centimeter (3.2283 inch)
Drain Lengh	30 Centimeter (11.811 inch)
Drain Height	7.5 Centimeter (2.95 inch)
Pipe Size	5 Centimeter (1.96 inch)
Total Weight	1119g (2.46 lbs or 39.47 oz).





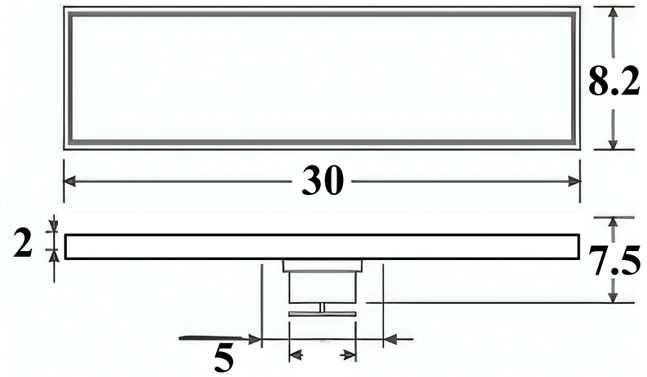



Floor Drain, Rectangular Stainless Steel 201249 NEW





Specifications
Linear shower drain built from premium stainless steel, ensuring long-term resistance to corrosion and wear. Designed for flush installation in the shower floor, featuring a versatile 2-in-1 tray for either the supplied steel grate or matching floor tile. Equipped with an odor-blocking system for a fresh bathroom environment.

Item No.	DESCRIPTION
201249	Type 304 (CF8) Stainless Steel Drain 40x8 cm & 2in1 central tray
	SPECIFY DRAIN SIZE IN CENTIMETER
Drain Width	8.2 Centimeter (3.2283 inch)
Drain Lengh	40 Centimeter (15.748 inch)
Drain Height	7.5 Centimeter (2.95 inch)
Pipe Size	5 Centimeter (1.96 inch)
Total Weight	~1250g (2.76 lbs or 44.09 oz).





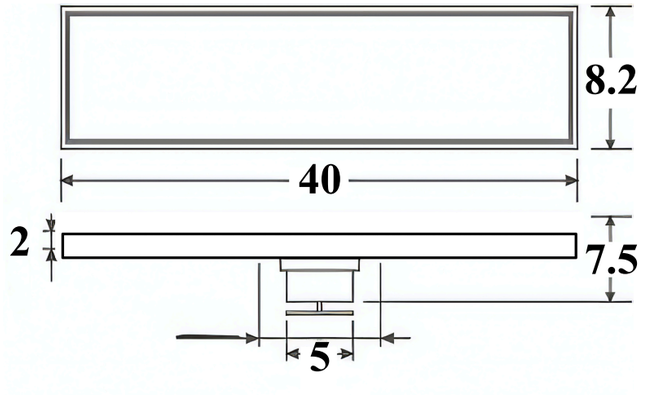



Floor Drain, Rectangular Stainless Steel 201250 NEW





Specifications
High-grade stainless steel floor drain channel, engineered for durability and rust prevention. Its recessed design allows perfect integration with your shower flooring using either the included grate or a tile insert. Comes with a built-in trap to stop unpleasant sewer smells.

Item No.	DESCRIPTION
201250	Type 304 (CF8) Stainless Steel Drain 50x8 cm & 2in1 central tray
	SPECIFY DRAIN SIZE IN CENTIMETER
Drain Width	8.2 Centimeter (3.2283 inch)
Drain Lengh	50 Centimeter (19.685 inch)
Drain Height	7.5 Centimeter (2.95 inch)
Pipe Size	5 Centimeter (1.96 inch)
Total Weight	~1.5 kg (2.2 lbs or 52.91 oz).



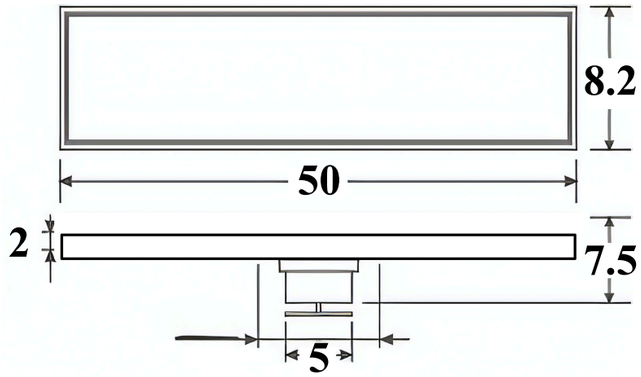





Floor Drain, Rectangular Stainless Steel 201251 NEW





Specifications
Modern shower drainage system crafted from corrosion-resistant stainless steel, ideal for embedded installation. Offers a dual-function tray that supports both metal and tile inserts. Includes an anti-odor closure to maintain hygiene and comfort.

Item No.	DESCRIPTION
201251	Type 304 (CF8) Stainless Steel Drain 60x8 cm & 2in1 central tray
	SPECIFY DRAIN SIZE IN CENTIMETER
Drain Width	8.2 Centimeter (3.2283 inch)
Drain Lengh	60 Centimeter (23.622 inch)
Drain Height	7.5 Centimeter (2.95 inch)
Pipe Size	5 Centimeter (1.96 inch)
Total Weight	~2.09 kg (4.61 lbs or 73.74 oz).



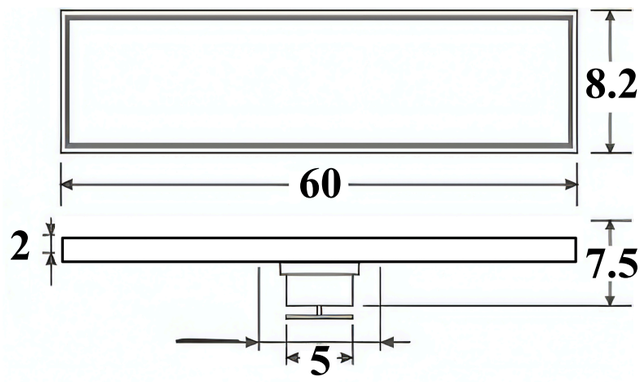









Linear Shower Drain 24-Inch, Stainless Steel Rectangle Shower Floor Drain with **Removable Quadrato Pattern Grate**, Brushed

OB

Floor Drain, Rectangular Stainless Steel 201252 NEW







Specifications
Sturdy linear drain made from heavy-duty stainless steel, suitable for seamless installation within the shower floor.

Item No.	DESCRIPTION
201252	Type 304 (CF8) Stainless Steel Drain 30x8 cm & 2in1 central tray
	SPECIFY DRAIN SIZE IN CENTIMETER
Drain Width	8.2 Centimeter (3.2283 inch)
Drain Lengh	30 Centimeter (11.811 inch)
Drain Height	7.5 Centimeter (2.95 inch)
Pipe Size	5 Centimeter (1.96 inch)
Total Weight	1119g (2.46 lbs or 39.47 oz).

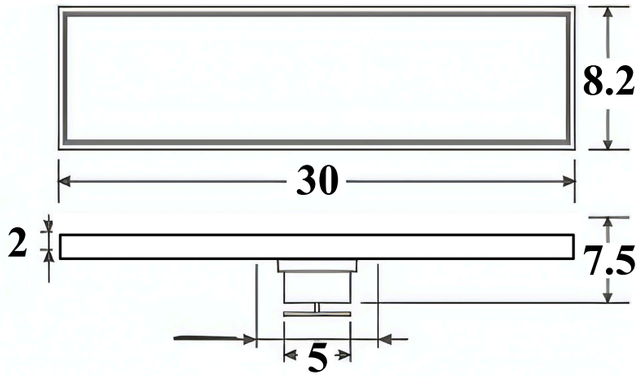





Floor Drain, Rectangular Stainless Steel 201253 NEW







Specifications
Sleek stainless steel drain channel designed for long-lasting performance against rust and moisture. Allows concealed installation with the option of using the metal grate or integrating the same floor tile. Odor-stop technology included for added protection..

Item No.	DESCRIPTION
201253	Type 304 (CF8) Stainless Steel Drain 40x8 cm & 2in1 central tray
	SPECIFY DRAIN SIZE IN CENTIMETER
Drain Width	8.2 Centimeter (3.2283 inch)
Drain Lengh	40 Centimeter (15.748 inch)
Drain Height	7.5 Centimeter (2.95 inch)
Pipe Size	5 Centimeter (1.96 inch)
Total Weight	~1250g (2.76 lbs or 44.09 oz).

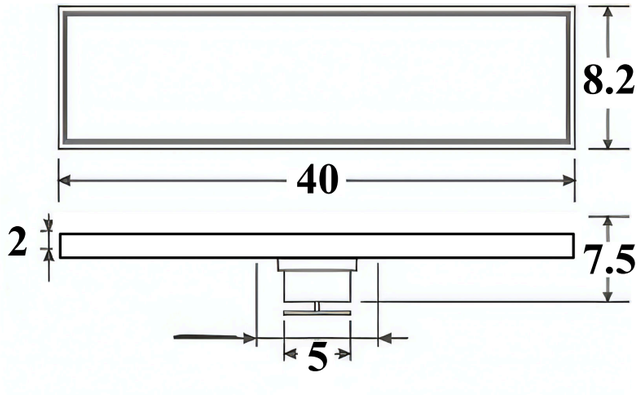





Floor Drain, Rectangular Stainless Steel 201254 NEW





Specifications
Premium embedded shower drain constructed from high-strength stainless steel to withstand corrosion

Item No.	DESCRIPTION
201254	Type 304 (CF8) Stainless Steel Drain 50x8 cm & 2in1 central tray
	SPECIFY DRAIN SIZE IN CENTIMETER
Drain Width	8.2 Centimeter (3.2283 inch)
Drain Lengh	50 Centimeter (19.685 inch)
Drain Height	7.5 Centimeter (2.95 inch)
Pipe Size	5 Centimeter (1.96 inch)
Total Weight	~1.5 kg (2.2 lbs or 52.91 oz).



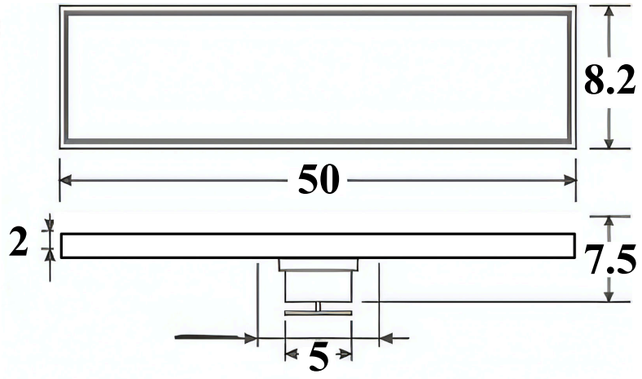





Floor Drain, Rectangular Stainless Steel 201255 NEW





Specifications
Robust stainless steel shower channel, perfect for flush mounting into tiled floors.

Features a built-in anti-odor trap to keep sewer gases out.

Item No.	DESCRIPTION
201255	Type 304 (CF8) Stainless Steel Drain 60x8 cm & 2in1 central tray
	SPECIFY DRAIN SIZE IN CENTIMETER
Drain Width	8.2 Centimeter (3.2283 inch)
Drain Lengh	60 Centimeter (23.622 inch)
Drain Height	7.5 Centimeter (2.95 inch)
Pipe Size	5 Centimeter (1.96 inch)
Total Weight	~2.09 kg (4.61 lbs or 73.74 oz).



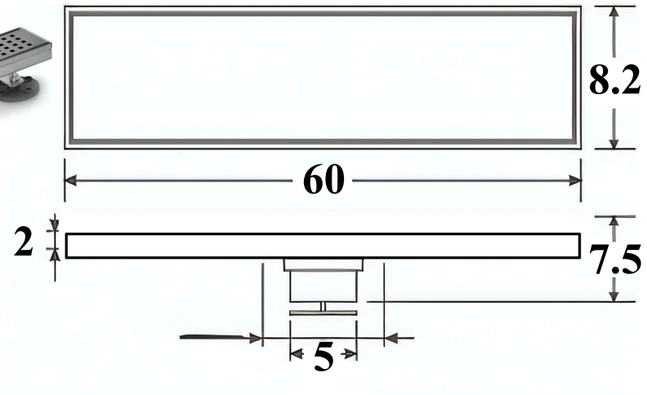







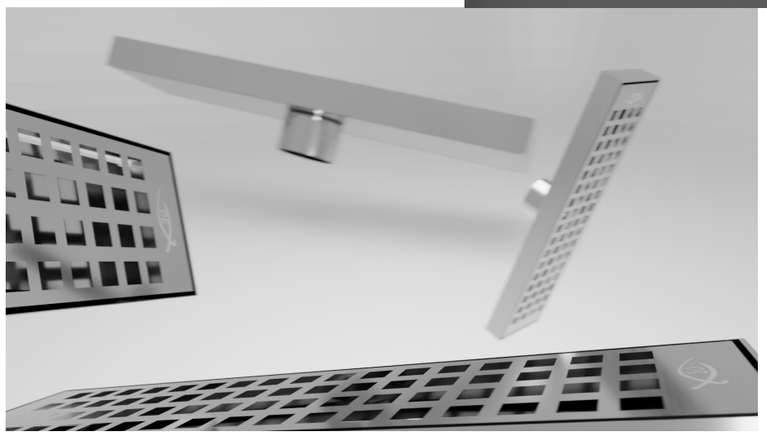



Material: Made of high-quality 304 stainless steel, which helps prevent rust.

Design: Features a sleek, modern design with a shallow "V" shape for quick water flow.

Features: Includes a built-in odor stop

Drainage Speed: Capable of high drainage speeds, up to 30L/min or 36L/min depending on the specific model.

Usage: Suitable for use in bathrooms, shower rooms, balconies, kitchens, and laundry areas

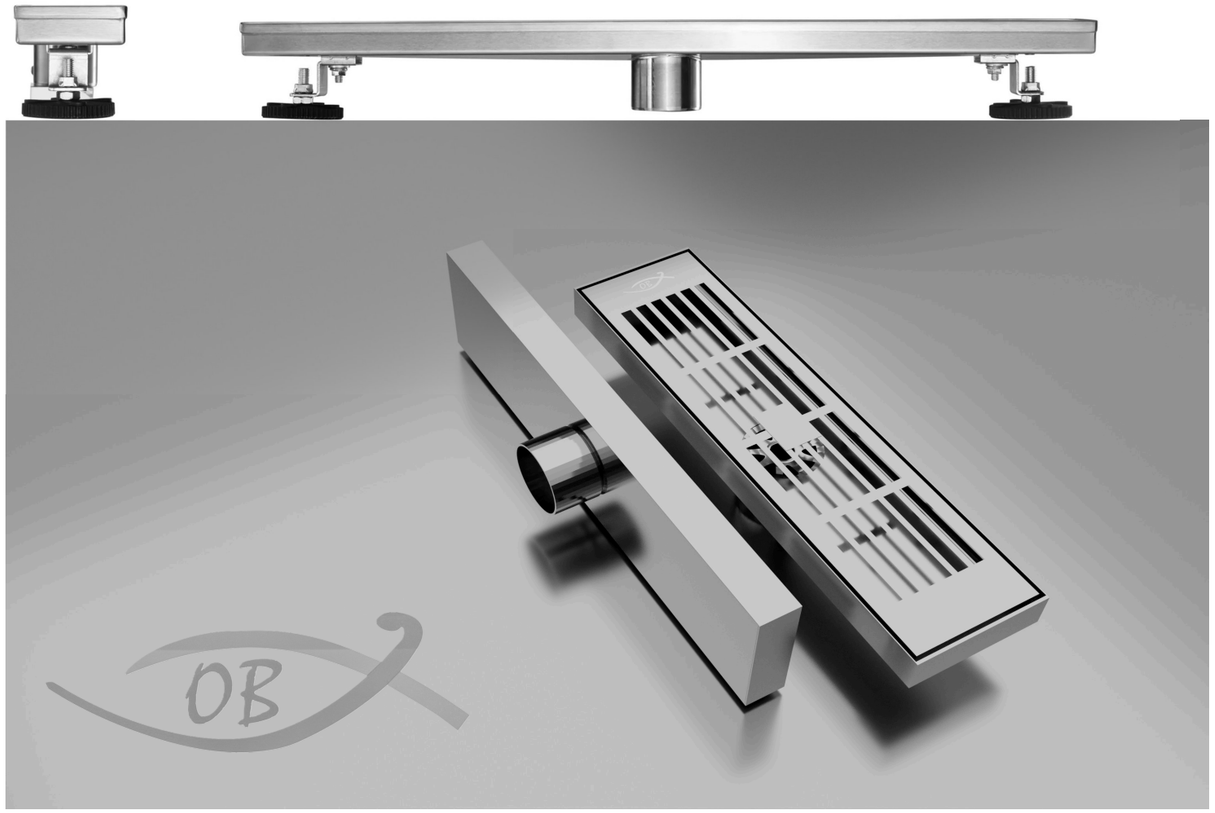

Floor Drain, Rectangular Stainless Steel 201256 NEW





Specifications
Embedded stainless steel drainage channel offering durability and a clean, minimalist appearance.
Includes an odor-control system for improved comfort.

Item No.	DESCRIPTION
201256	Type 304 (CF8) Stainless Steel Drain 30x8 cm & 2in1 central tray
	SPECIFY DRAIN SIZE IN CENTIMETER
Drain Width	8.2 Centimeter (3.2283 inch)
Drain Lengh	30 Centimeter (11.811 inch)
Drain Height	7.5 Centimeter (2.95 inch)
Pipe Size	5 Centimeter (1.96 inch)
Total Weight	1119g (2.46 lbs or 39.47 oz).

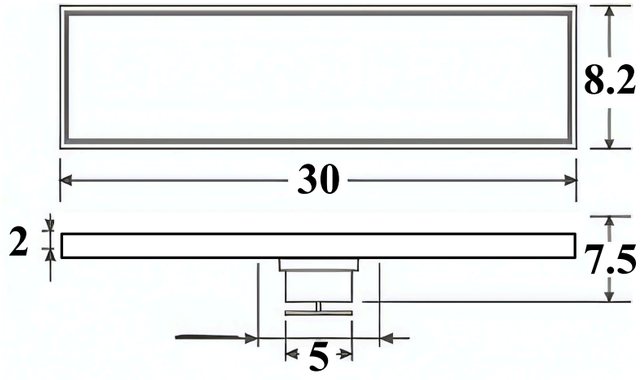



Floor Drain, Rectangular Stainless Steel 201257 NEW





Specifications
Heavy-duty shower floor channel made from rust-resistant stainless steel, suitable for indoor and outdoor applications.
Comes with a sealing trap to stop bad smells.

Item No.	DESCRIPTION
201257	Type 304 (CF8) Stainless Steel Drain 40x8 cm & 2in1 central tray
	SPECIFY DRAIN SIZE IN CENTIMETER
Drain Width	8.2 Centimeter (3.2283 inch)
Drain Lengh	40 Centimeter (15.748 inch)
Drain Height	7.5 Centimeter (2.95 inch)
Pipe Size	5 Centimeter (1.96 inch)
Total Weight	~1250g (2.76 lbs or 44.09 oz).

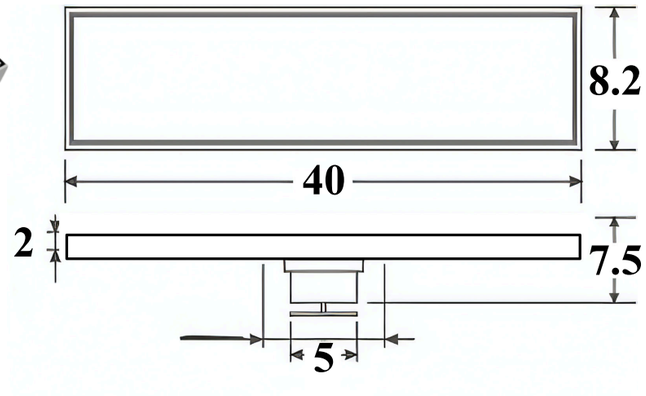



Floor Drain, Rectangular Stainless Steel — 201258 NEW









Specifications
Premium-grade stainless steel drain built to handle moisture and prevent corrosion over time.
Durable embedded drain made from premium stainless steel for superior strength and longevity.

Item No.	DESCRIPTION
201258	Type 304 (CF8) Stainless Steel Drain 50x8 cm & 2in1 central tray
	SPECIFY DRAIN SIZE IN CENTIMETER
Drain Width	8.2 Centimeter (3.2283 inch)
Drain Lengh	50 Centimeter (19.685 inch)
Drain Height	7.5 Centimeter (2.95 inch)
Pipe Size	5 Centimeter (1.96 inch)
Total Weight	~1.5 kg (2.2 lbs or 52.91 oz).

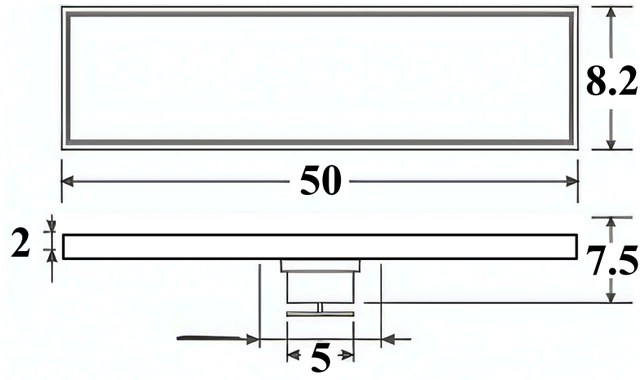

Floor Drain, Rectangular Stainless Steel — 201259 NEW









Specifications
High-quality stainless steel floor drain designed to resist rust and daily wear.

Reinforced stainless steel drain constructed to maintain strength and resist rust in the bathroom.

Item No.	DESCRIPTION
201259	Type 304 (CF8) Stainless Steel Drain 60x8 cm & 2in1 central tray
	SPECIFY DRAIN SIZE IN CENTIMETER
Drain Width	8.2 Centimeter (3.2283 inch)
Drain Lengh	60 Centimeter (23.622 inch)
Drain Height	7.5 Centimeter (2.95 inch)
Pipe Size	5 Centimeter (1.96 inch)
Total Weight	~2.09 kg (4.61 lbs or 73.74 oz).

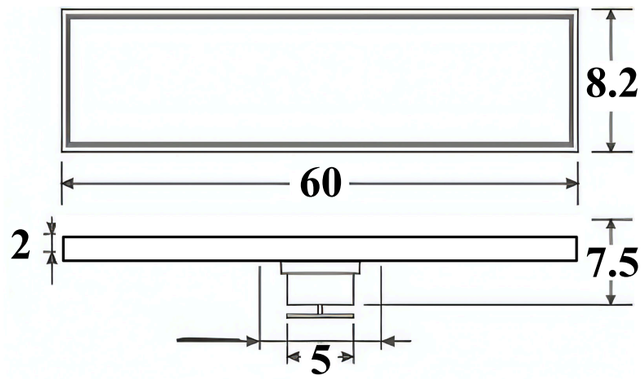

Floor Drain, 15x15 Ceramic — 201260 NEW





Specifications
Premium embedded 15×15 ceramic drain crafted for long-lasting durability and reliable performance.
designed to resist wear and maintain its finish over time.
Smooth-finish.

Item No.	DESCRIPTION
201260	Type 304 (CF8) Stainless Steel Drain 15x15 cm & 2in1 central tray
	SPECIFY DRAIN SIZE IN CENTIMETER
Drain Width	15 Centimeter (5.905 inch)
Drain Lengh	15 Centimeter (5.905 inch)
Drain Height	6,5 Centimeter (25.59 inch) Total
Pipe Size	5 Centimeter (1.968 inch)

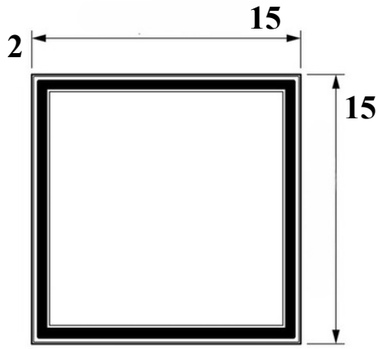

Floor Drain, 15x15 Stainless steel — 201261 NEW





Specifications
Sleek stainless steel floor drain crafted to stay looking like new, resisting rust and daily use. Reinforced stainless steel drain built to maintain its clean, like-new appearance while preventing rust in humid bathroom conditions.

Item No.	DESCRIPTION
201261	Type 304 (CF8) Stainless Steel Drain 15x15 cm
	SPECIFY DRAIN SIZE IN CENTIMETER
Drain Width	15 Centimeter (5.905 inch)
Drain Lengh	15 Centimeter (5.905 inch)

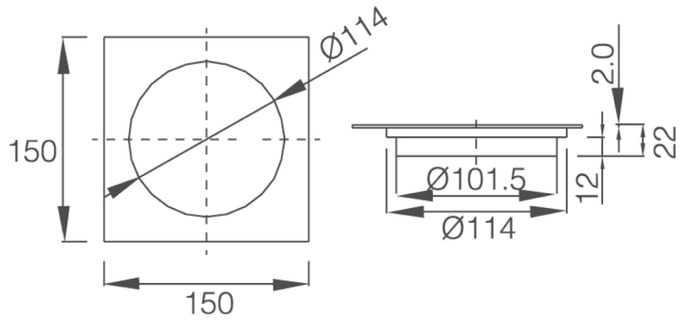

NOTE: Rubber included

Pop-up Sink Drain

NEW



Specifications

The whole piece measures 9.5 cm (3.54 in) from top to bottom, and the threaded section is 4 cm (1.57 in) in diameter. It's made with a chrome-finished metal body, a sturdy brass ring, and a white sealing gasket to help ensure a tight fit.

7 cm (2.75 in) wide top cap that sits about 2 cm (0.78 in) high.

Item No.	DESCRIPTION
	High-Quality Pop up (COPPER)
	SPECIFY DRAIN SIZE IN CENTIMETER
	Top Cap Diameter: 7 cm (2.75 in) Top Cap Height: 2 cm (0.78 in) Total Height: 9.5 cm (3.54 in) Threaded Body Diameter: 4 cm (1.57 in)



SARAWAT



MIXERS





NAMAR

SAUDI MADE

5 YEAR GUARANTEE





NAMAR

SAUDI MADE

5 YEAR GUARANTEE



MODEL FAMILY : **NAMAR**
(1010201867)

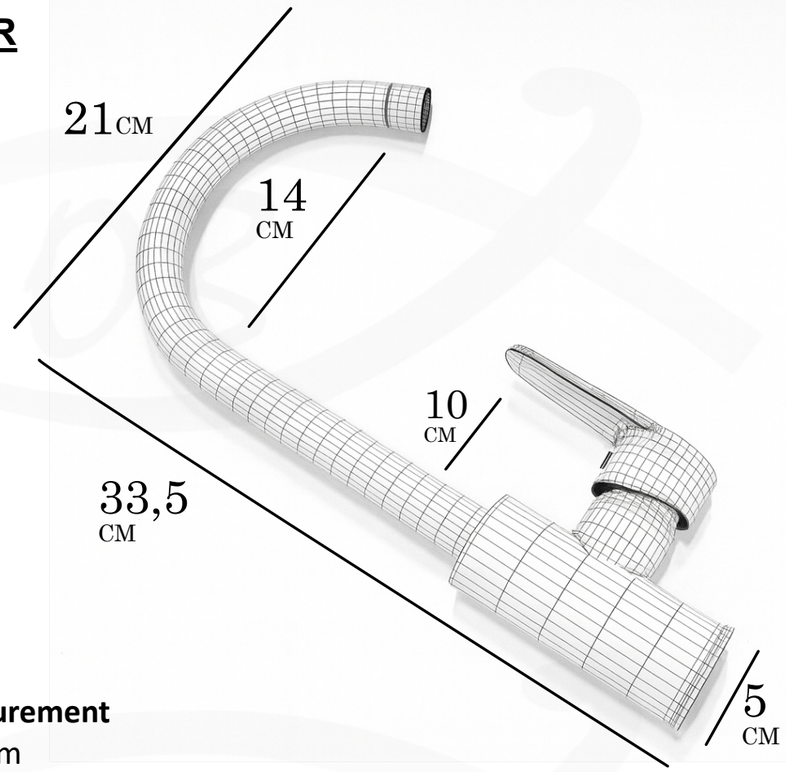

Component	Measurement
Total Faucet Length	33.5 cm
Spout Height	21 cm
Spout Reach	14 cm
Handle Height	10 cm
Base Diameter	5 cm

Curved Spout Design: Offers ample clearance for washing large items and filling deep containers.
Single Lever Handle: Positioned ergonomically for easy temperature and flow control.
Compact Base Diameter: Suitable for standard sink holes and ensures a stable installation.
Balanced Proportions: The 21 cm spout height and 14 cm reach provide a practical arc for water flow without splashing.

MODEL FAMILY : **NAMAR**
(1010201866)

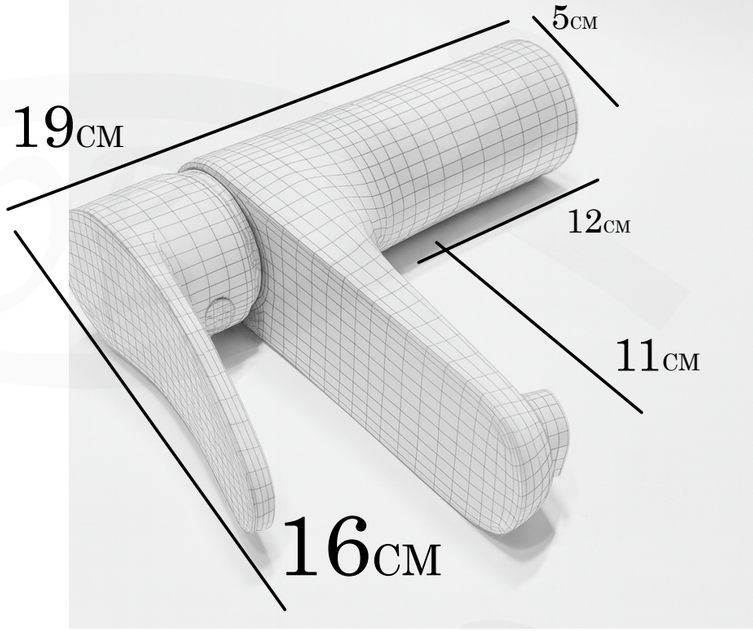

Component	Measurement
Total Faucet Length	19 cm
Spout Height	16 cm
Spout Reach	11 cm
Handle Height	~4 cm
Base Diameter	5 cm

Streamlined Cylindrical Form: Offers a modern, minimalistic aesthetic suitable for contemporary kitchens or bathrooms.
Extended Spout Reach: The 16 cm spout length provides ample clearance for sink activities.
Ergonomic Lever Placement: Positioned for intuitive control, with a 12 cm reach for easy access.
Compact End Height: The 5 cm cylindrical outlet ensures a clean water flow while maintaining a sleek profile.



NAMAR



SAUDI MADE

5 YEAR GUARANTEE

HAND-SHOWER

SAUDI MADE

5 YEAR GUARANTEE

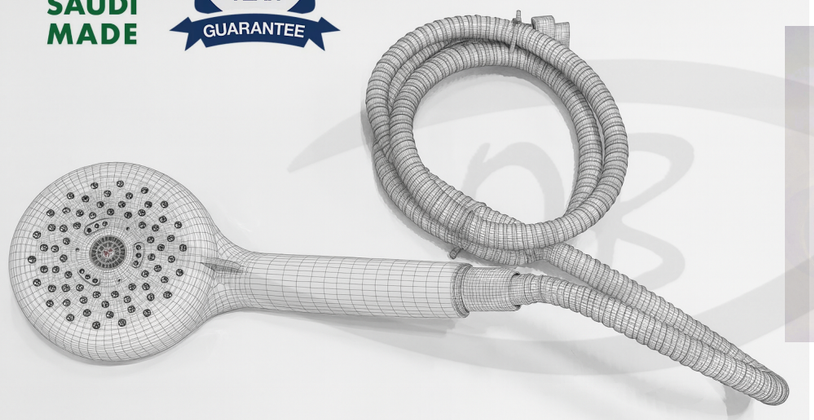



MODEL FAMILY : **NAMAR**
(1010201865)

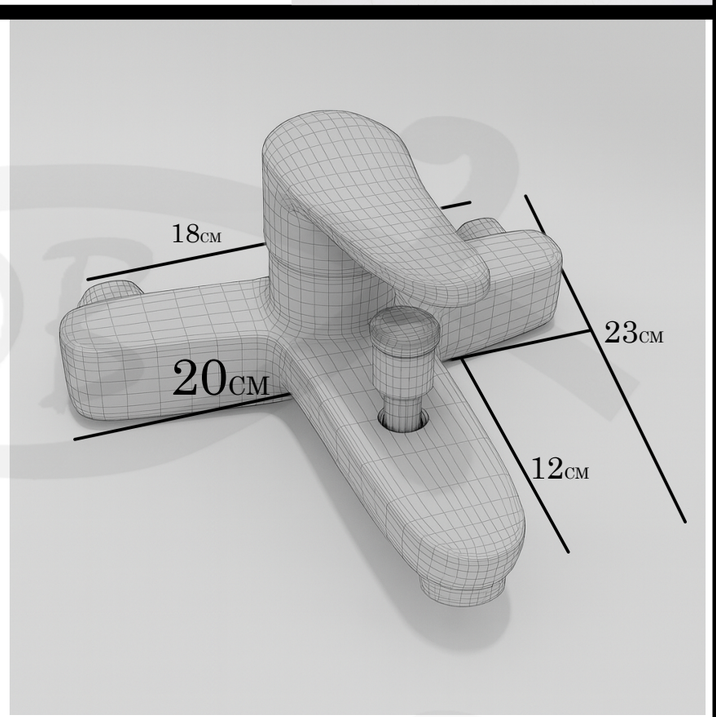

Component	Measurement
Total Faucet Length	20 cm
Spout Height	23 cm
Spout Reach	12 cm
Handle Height	~4 cm

Streamlined Cylindrical Form: Offers a modern, minimalistic aesthetic suitable for contemporary bathrooms.
Extended Spout Reach: long spout length provides ample clearance for sink activities.
Ergonomic Lever Placement: Positioned for intuitive control, with reach for easy access.

MODEL FAMILY : COMFORT PLUS
(included with shower mixer)

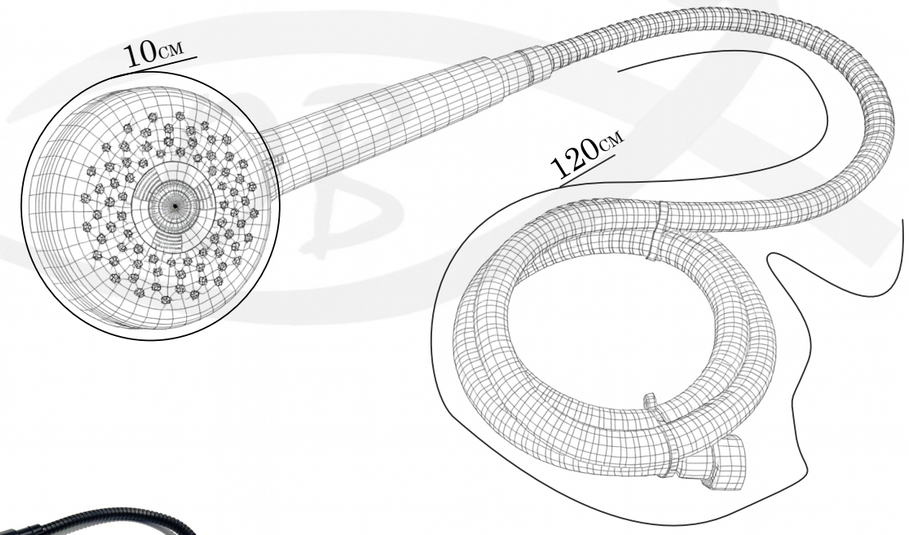



Component	Measurement
Showerhead diameter	10 cm
Hose length	120 cm

Spray coverage: A 10 cm head typically supports multi-spray patterns and balanced coverage without excessive flow demand.
Ergonomics: 120 cm hose length offers comfortable reach for rinsing, cleaning the basin, and handheld use while minimizing tangling.





MODEL FAMILY : COMFORT PLUS
(1010201869)

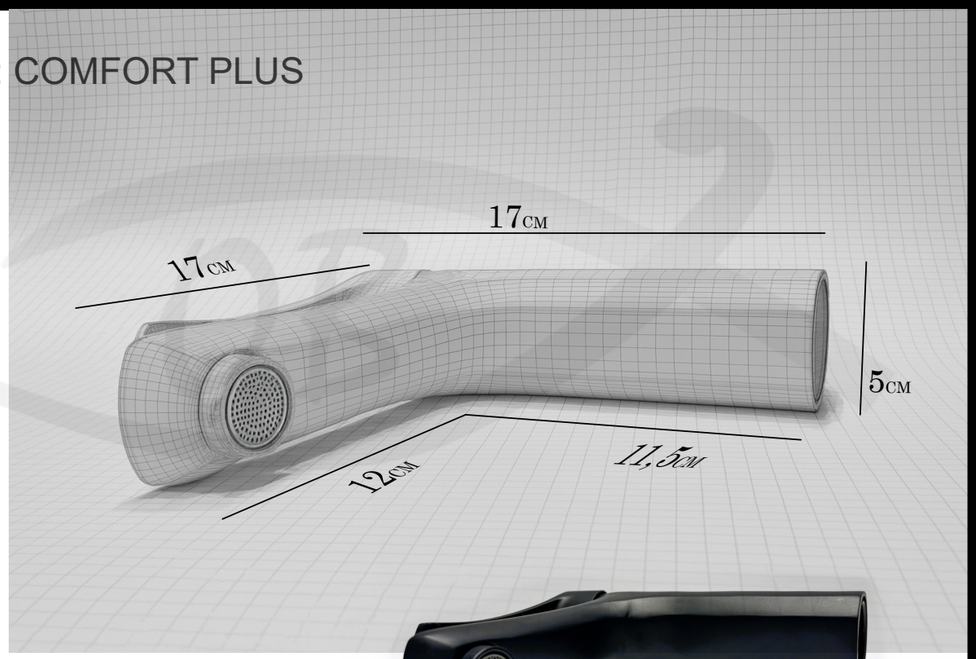

Total Length (Back to Front)	17 cm
Cylindrical End Height	5 cm
Bottom Side Length	11.5 cm
Top Side Length	12 cm
Length from Circular Element to End	17 cm

Curved Geometry: The slight difference between top and bottom lengths (12 cm vs. 11.5 cm) suggests a gentle curvature, possibly for ergonomic or aerodynamic purposes.
Cylindrical Base: The 5 cm height may indicate a mounting or connection point, suitable for rotational or fixed installation.
Circular Element: Positioned centrally, possibly functioning as a speaker, sensor, or decorative feature.

MODEL FAMILY : COMFORT PLUS
(1010201870)

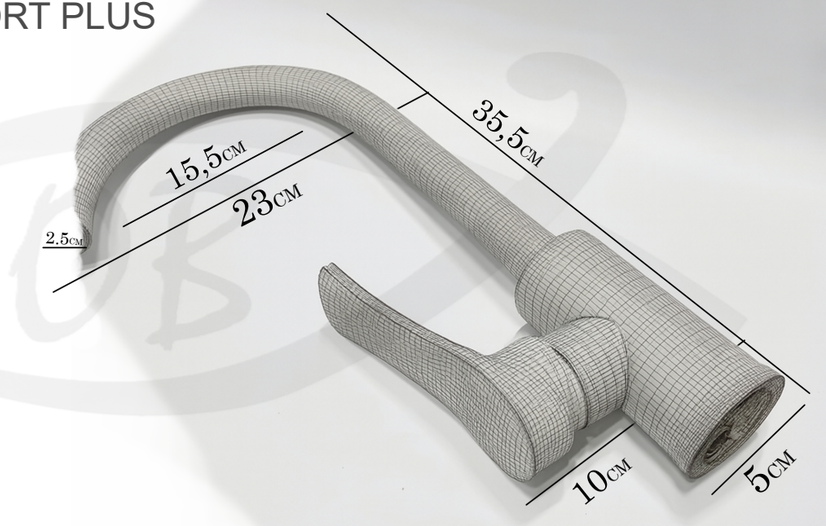

Total Height	35.5 cm
Spout Height	15.5 cm
Spout Length	23 cm
Handle Length	10 cm
Base Width	5 cm
Spout Diameter	2.5 cm

Tall Profile: The 35.5 cm height makes it suitable for deep sinks and high-clearance installations.
Extended Spout Reach: With a 23 cm horizontal length, it offers generous coverage for wide basins.
Compact Handle: The 10 cm lever ensures smooth control without occupying excess space.



MODEL FAMILY : COMFORT PLUS
(1010201868)

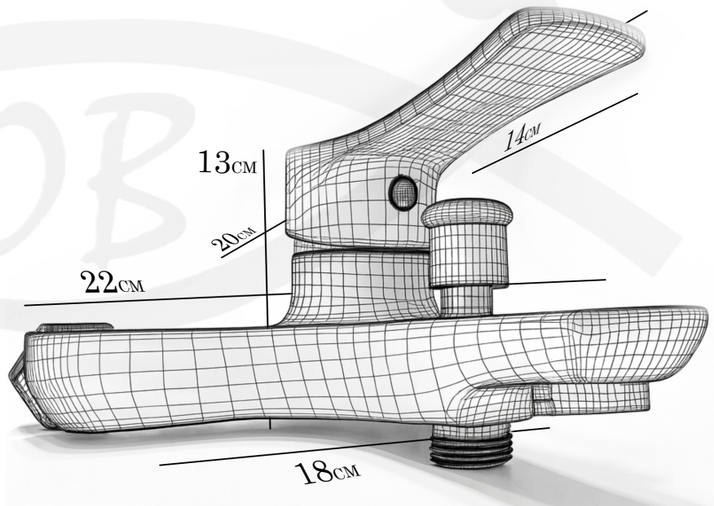

Total Height	13 cm
Top Lever Length	14 cm
Total Mixer Width	22 cm
Spout Reach	18 cm

Dual-Level Height Profile, for ergonomic access and visual balance.
Extended Lever: The 14 cm length provides comfortable grip and precise control.
Generous Spout Reach,





Collection of Colors | models

Shattaf

Top Models



GROHE Bathroom Fixtures, Trigger Spray, Shattaf with Wall Holder - Tempesta-F Collection, 27513001



GROHE
New Tempesta-F Bathroom Fixtures, Trigger Spray, Shattaf with Wall Holder 5,7l - 26356ILD



Hesanit
Logic Bidet Sprayer Shattaf Spray with Hose & Wall Bracket Holder Set, Chrome Finish



Ideal Standerd
Trigger Spray shower set
B0924AA



Roca Bathroom Fixtures, Trigger Spray, Shattaf Be Fresh Roca
A5B9130C00



TREDEX
Chrome Shattaf
TRF00073-74



Roca
Bidet Sprayer Shattaf Spray with Hose & Wall Bracket Holder Set,
A5B9330C00

White
Golden
Black
Silver

Much MORE .. models …





Shower Arm

Material: copper, plastic & stainless steel



STAMINA wall-mounted rectangular shower arm

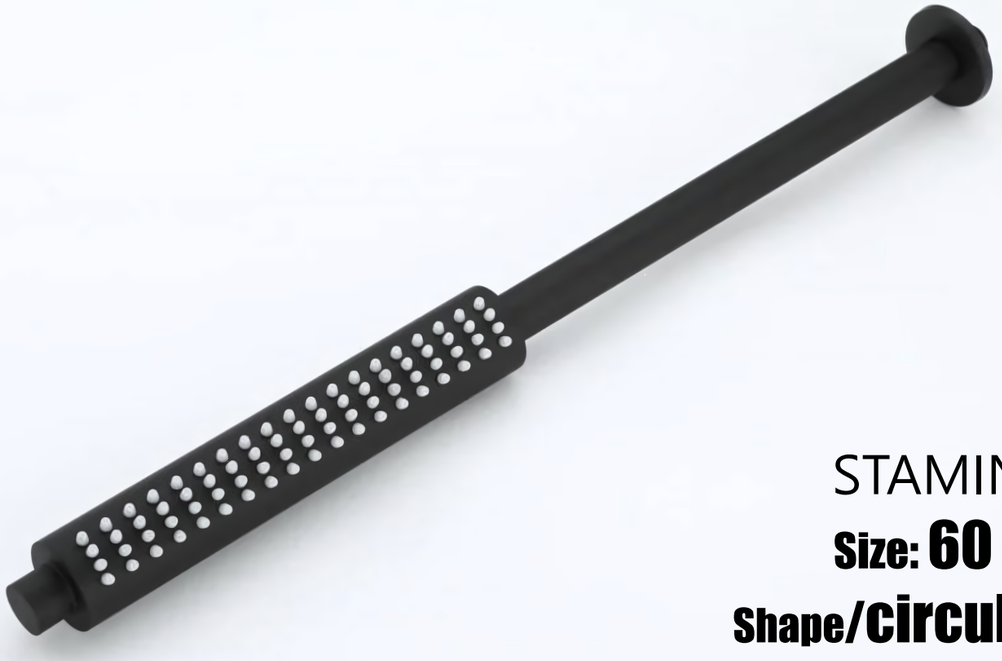

STAMINA

Size: 60 cm

Shape/circular

Black / Silver / Gold color

Spout



Hesanit spout



BauCosmopolitan
13255001



Lima Spout
ST2063-4BB



Hesanit Spout
S7002-1



Grohe Spout
13255000



LIMA -1
ST2063-1CC



LIMA-1
ST2063-1GG



LIMA GOlden
ST2063-3GG



Round Bath Spout

P-Trap



Black Spout



Tredex Black Spout
TRF0590

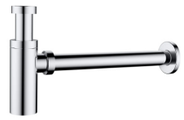

Tredex Silver Spout
TRF0580



Tredex Silver Spout
TRF0590



HANZIT
Sink Chrome Automatic
H6001



Brass Head Chrome Sink trap
8104Y



Lima Black Trap
ST-007B



Tredex Silver Spout
PU2000

SHOWER PARTITIONS

70 cm,80 cm,90 cm,100 cm



NE-141146W

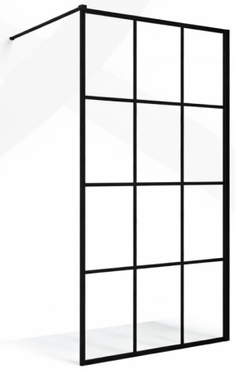

NE-14116 3B



NE-14126



NE-14119



NE-14122

Shower enclosures with glass panels are popular for their sleek design, durability, and ease of cleaning.
The size depends on the shower area's dimensions (length × width) and whether it includes a door or is fixed.





Ruler/shower system



Bathroy (made in italy)
Digital piano shower
ruler complete set
multi-color



Grohe Tempesta
Cosmopolitan
250 Flex shower system
with diverter for wall mounting
26675000



Lima Shower Ruler
Black/White
wall mount
sh-111



Bathroy (made in italy)
Shower Riser Black
with Shower Headset Ruler
Shower Square Showerruler
complete set
multi-color



Lima Shower Ruler
wall mount Black
Lima-sh 0101-1001



Lima Shower Ruler
wall mount Gold
Lima-sh 0101-1004



SAUDI MADE

OPRA wall mount
Opra DT



Tridex Shower Mixer
with Complete Shower Set
TRR s0076



KLUDI RAK
RAK 480011

ANGLE VALVE

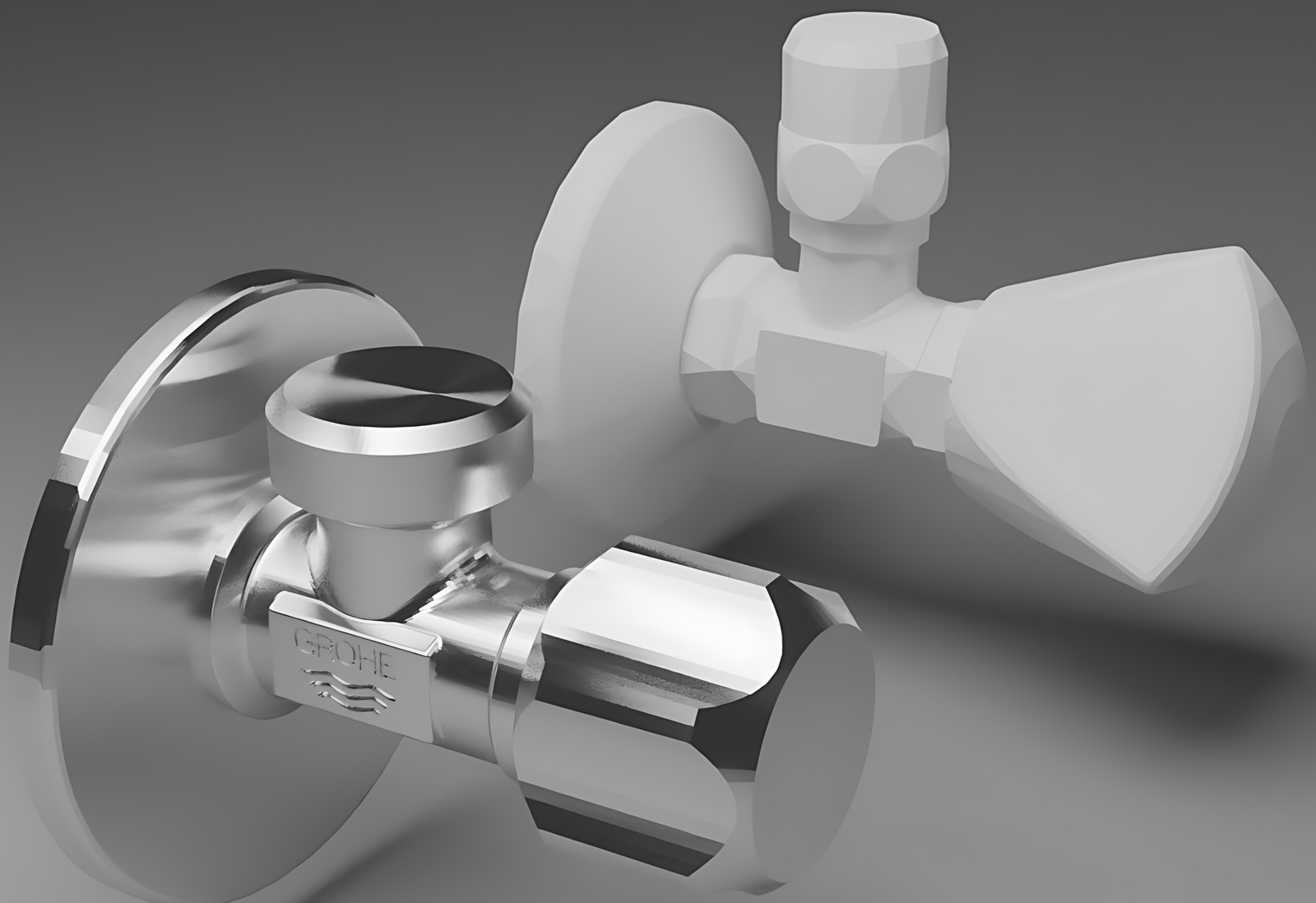

Pure Freude an Wasser

GROHE

22 939 000
ANGLE VALVE 1/2"





Material: **Stainless Steel** 304 / 316
Flexibility: High flexibility with vibration absorption
Temperature Range: –20°C to +100°C **(depending on model)**
Pressure Resistance: High working pressure with strong safety factor

Length : 100 cm , 80 cm , 60 cm , 50 cm

Stainless steel hose offers extreme durability, stopping kinks, rust, & more ,the triple-reinforced PVC inner hose shields from sun, rain, etc...
Nickel-plated connectors enhance the robust brass.
Experience high performance with a steady, **leak-proof flow**

SAUDI MADE

WARRANTY 1 YEAR WARRANTY

SARAWAT

Sample of **Angle Valve** we supply



Heaters Hose



Stainless Steel Flexible Hose Pipe

Item Weight	180 g
Product Dimensions	10 x 10 x 0.1 cm
Size	3/4X3/4 60CM

Length
30cm
40cm
50cm
60cm
80cm
100cm



Heaters



ARISTON AURES
Multi-Instantaneous
Electric Water Heater



Ariston Andris R
Electric Water Heater
30L



Ariston
Electric Water Heater
50L



Weijo
White/Black electronic
instant water heater



Veito
instant
water heater



Saudi Ceramic
Electric Water Heater
50/100L



Saudi Ceramic
Electric Water Heater
50/100L



Saudi Ceramic
Electric Water Heater
15/30L

2026



Marble Collection



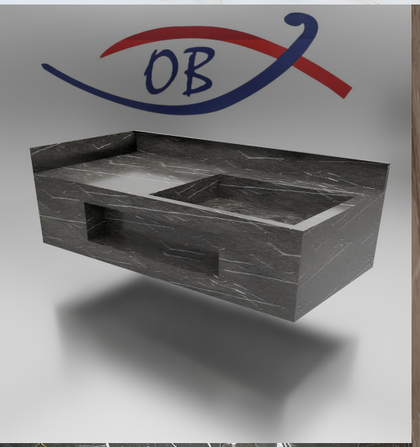





Obhur Bridge

MARBLE ELEGANCE

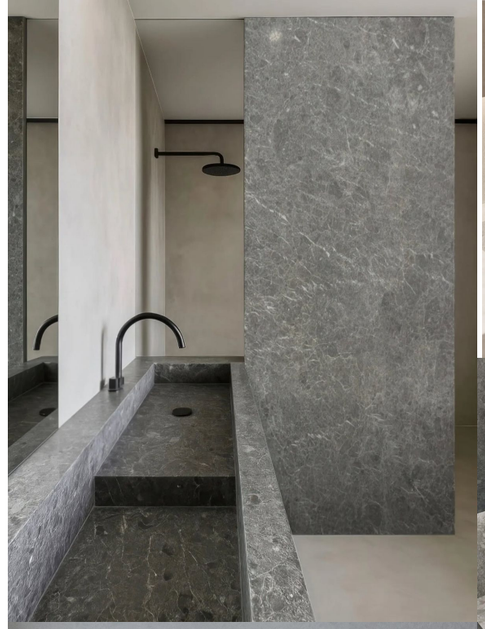









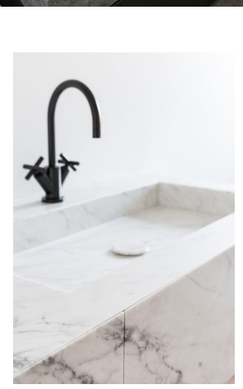



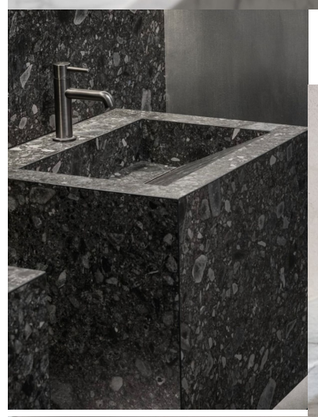

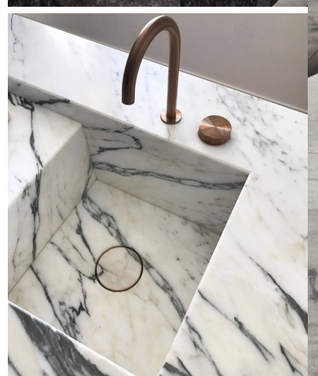







Marble



A modern luxury bathroom sink made of **marble Light** with gray veining,



Select from tons of designs ,
colors,
shape,
style,
size,
& Type

Sanitary accessories Set



Roca Classica Model 6 Pcs



ORISA 6-piece accessory set,
heavy-duty 304 stainless steel



ORISA 6-piece accessory set,
heavy-duty 304 stainless steel
OR60206



ORISA 6-piece accessory set,
heavy-duty 304 stainless steel
OR60172



ORISA 6-piece accessory set,
heavy-duty 304 stainless steel
OR60170

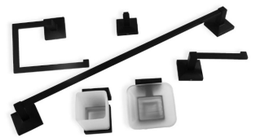

ORISA 6-piece accessory set,
heavy-duty 304 stainless steel
OR60171



ORISA 6-piece accessory set,
heavy-duty 304 stainless steel



ORISA 6-piece accessory set,
heavy-duty 304 stainless steel
OR60229



ORISA 6-piece accessory set,
heavy-duty 304 stainless steel
OR60207



ORISA 6-piece accessory set,
heavy-duty 304 stainless steel
OR60232



ORISA 6-piece accessory set,
heavy-duty 304 stainless steel
OR60230



ORISA 6-piece accessory set,
heavy-duty 304 stainless steel
OR60231



ORISA 6-piece accessory set,
heavy-duty 304 stainless steel
OR60174



ORISA 6-piece accessory set,
heavy-duty 304 stainless steel
OR60175



Silver titanium Collection



Mirrors









Feel your best while getting ready & let you set the perfect mood

3 Light Settings
(on special models)

Dimensions: come in many shapes and sizes



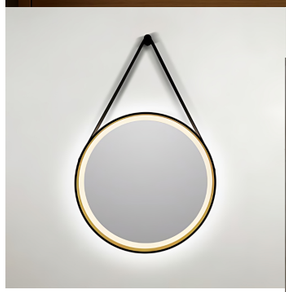









FREE STANDING BATHTUB





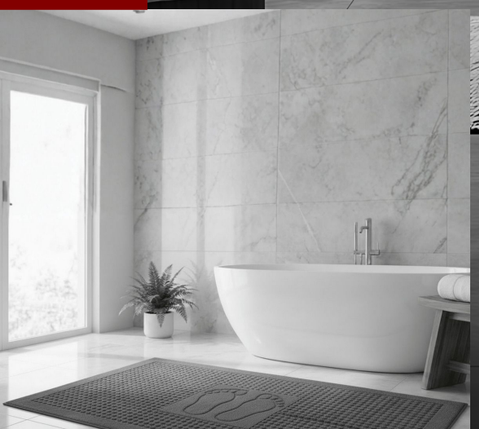

















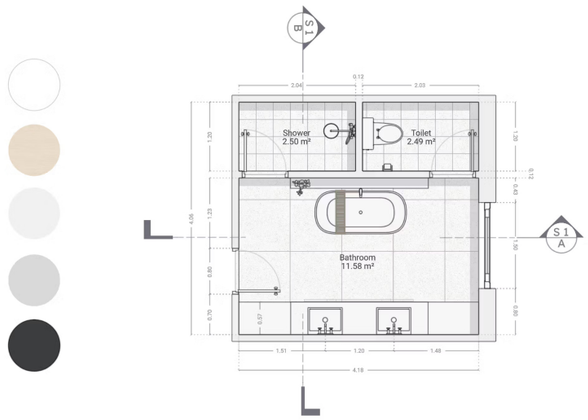



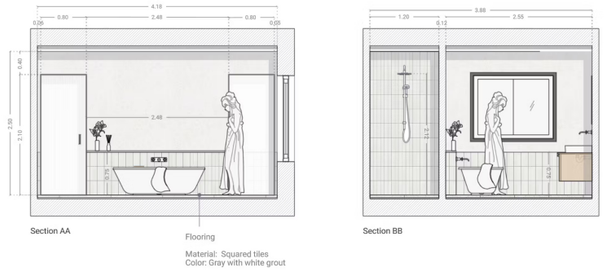



Tissue dispenser







Soap dispenser

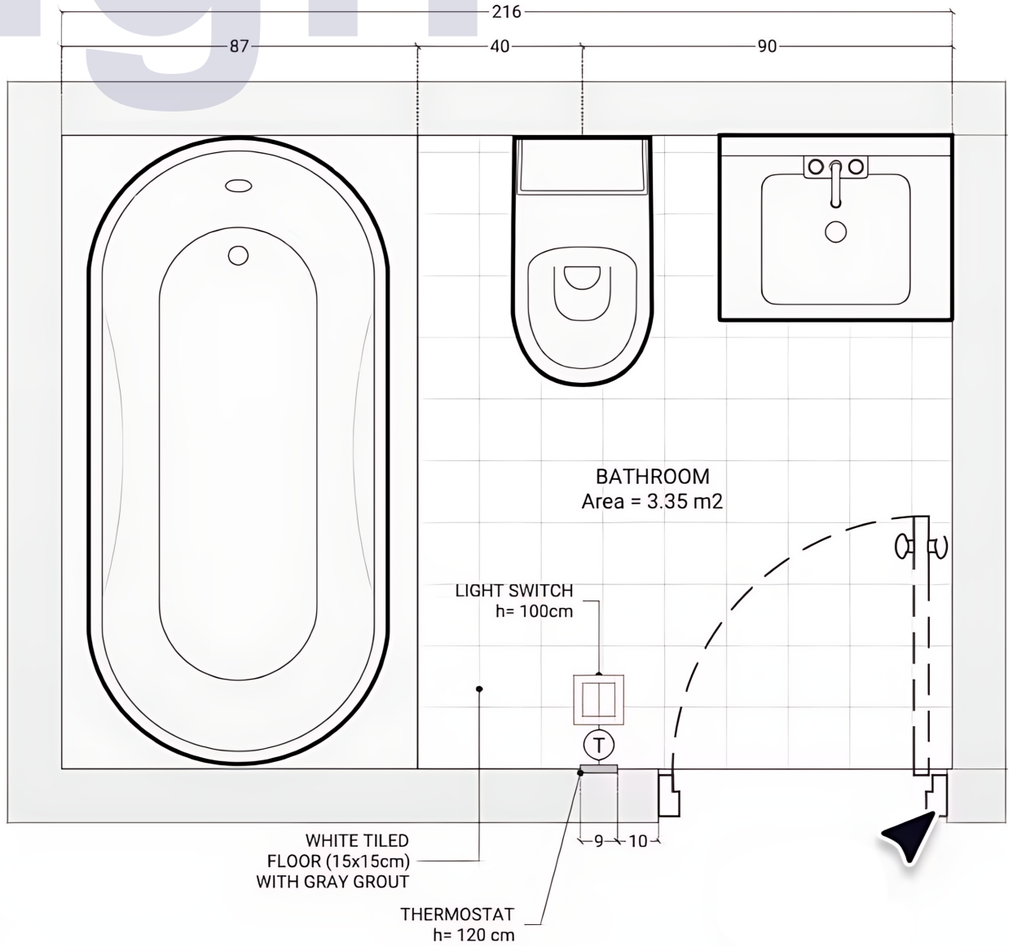

bathroom technical plans - Plumbing

OB Design

ENSURE EFFICIENT FUNCTIONALITY: TECHNICAL PLANS PROVIDE A CLEAR ROADMAP FOR INSTALLING ESSENTIAL SYSTEMS LIKE PLUMBING, VENTILATION, AND HEATING. BY MAPPING OUT WATER SUPPLY LINES , DRAINAGE SYSTEMS, AND AIRFLOW, THESE PLANS ENSURE THAT EVERY ELEMENT WORKS SEAMLESSLY TOGETHER, MINIMIZING DISRUPTIONS OR COSTLY REWORK DURING CONSTRUCTION.

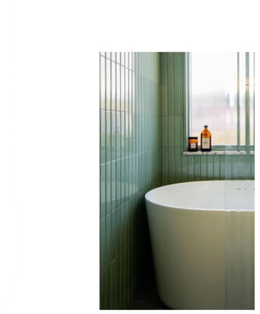

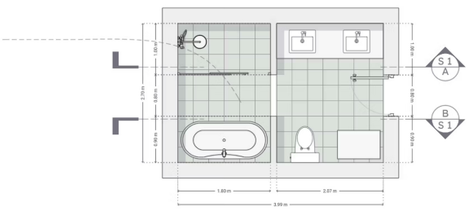





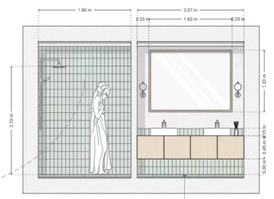

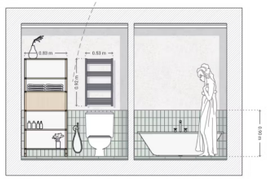









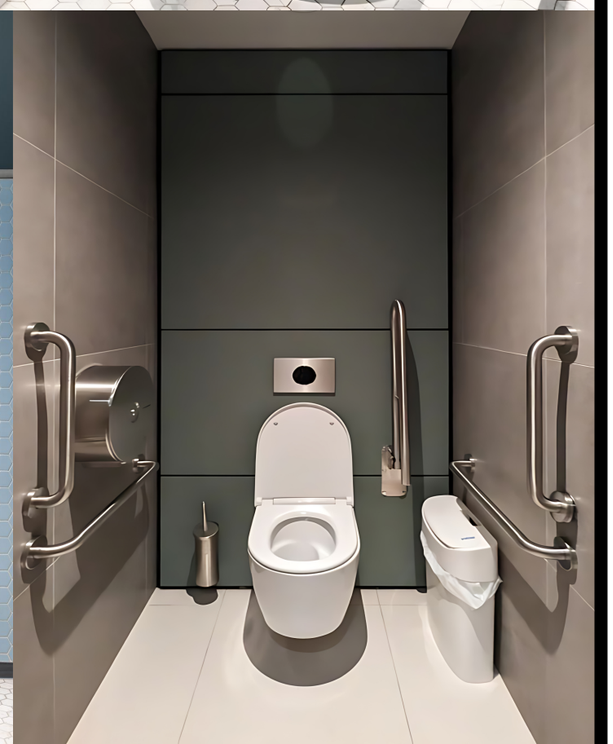

Disability



MEDICLINICS
Swing-up Grab bar 735mm
130230672025200

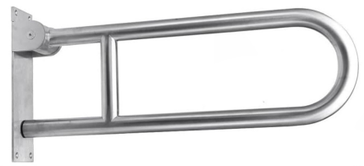

Swing-up Grab bar 600mm



helemend
NE-181901



helemend
NE-181026W



helemend
NE-18200 S/S



helemend
NE-18101 3B



helemend
NE-181904 S/S



helemend
NE-181902 1S



helemend
NE-18201 S/S





WC









Noise test **60** decibels

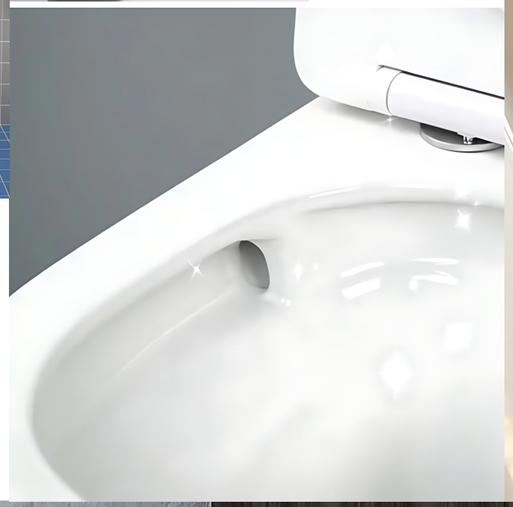



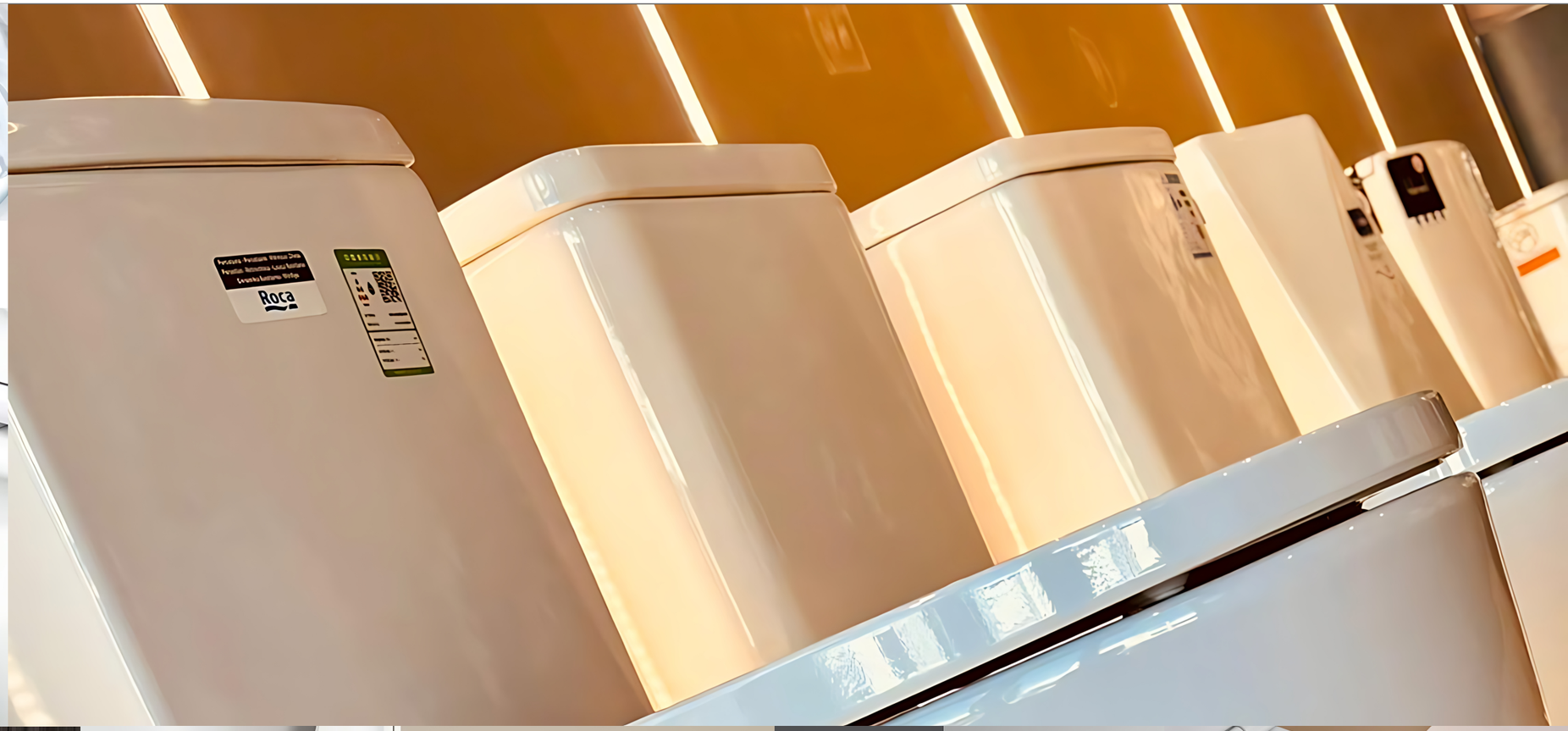











BRASS



101010753

Brass Fitting Datasheet –Size 20

Material: Brass
Application: Sanitary/Plumbing
Thread Type: BSP/NPT/Metric



Plumbing fixtures

Bidet & toilet systems

Shower & tap connectors

Air pressure tools, compressors

Hydraulic/low-pressure lines

Water filtering systems

designed for plumbing, HVAC, air systems

Used to adapt between different thread sizes or types

Suitable for water lines, air compressors, pumps, pressure meters, and general sanitary applications

Knurled surface ensures high friction for easy tightening/loosening

Compatible with rubber O-rings, PTFE tape, and typical plumbing sealants

✔ 100% corrosion-resistant brass

✔ Precision CNC-machined threads

✔ Leak-proof connection (when properly sealed)

✔ Durable knurled grip surface

✔ Suitable for domestic, industrial, and automotive systems



Material	High-quality brass (CuZn alloy)
Corrosion Resistance	Excellent resistance to water, moisture, mild acids, oils
Temperature Range	−40°C to +120°C (standard brass plumbing fittings)
Surface Finish	Polished brass, knurled grip texture

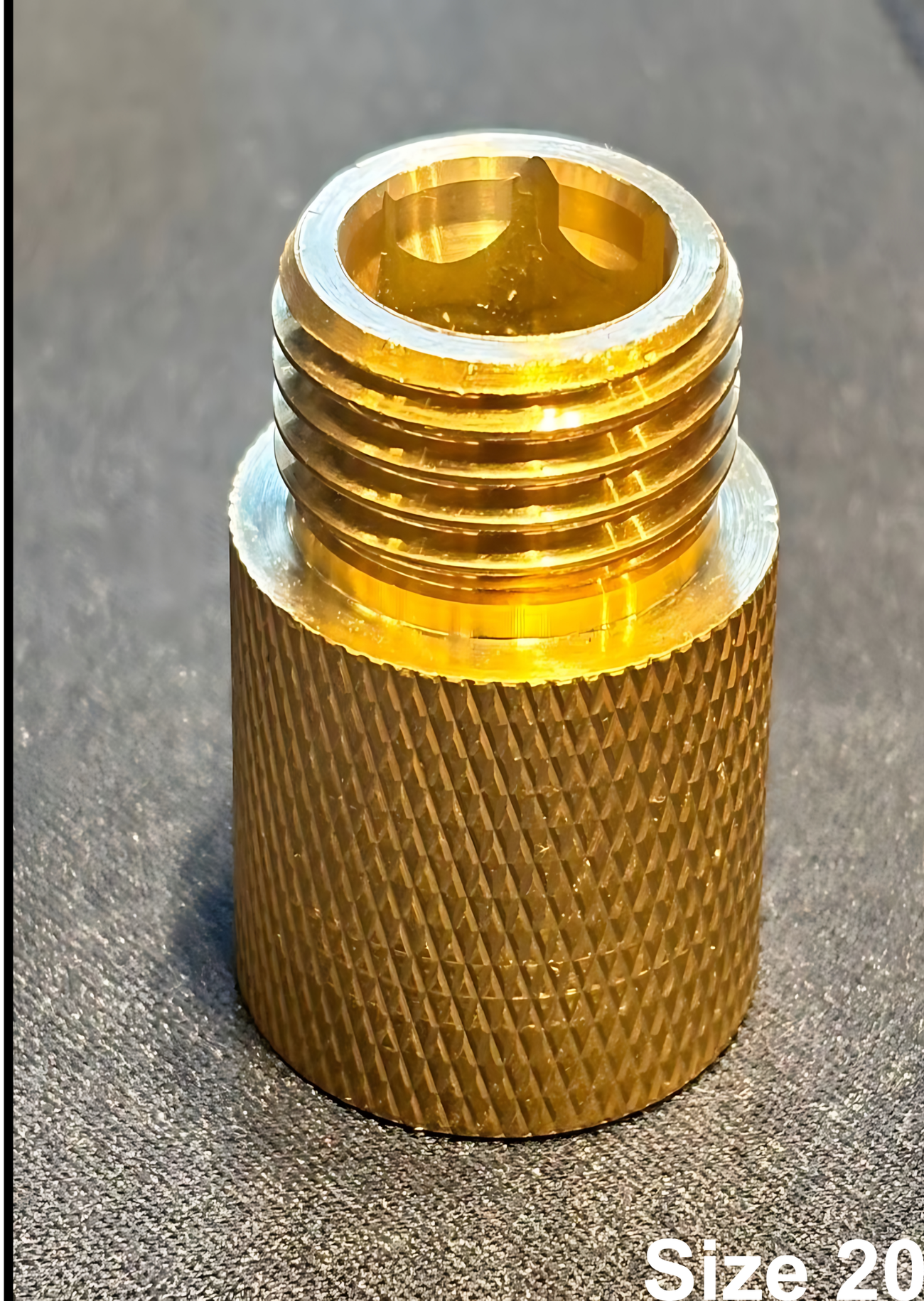



Outlet Aluminum Surface Insulation Filter 3 Pieces

3 | 4 inch



Adjustable Leak Control Flange



multiple adaptions for both water grates and water pipes

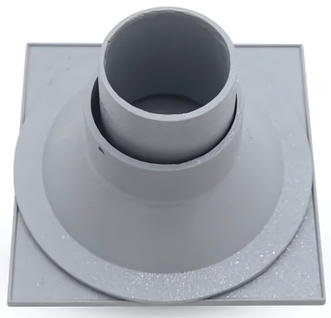

It’s specifically designed to eliminate any confusion and expense in having to mix and match common flanges, grates, and pipes.



Downspout Nozzle



Silver
Metal Rain Gutter - 3/4 Inch



Gray



Golden



White



Black

Key Features:

Smooth Curved Outlet: The angled, flared design guides rainwater away from walls, foundations, and walkways, helping prevent erosion and water damage.

Sturdy Metal Construction: Built to withstand heavy rain, UV exposure, and temperature changes without bending or rusting easily.

Flanged Base with Mounting Holes: The wide circular base includes pre-drilled holes for secure and easy installation onto standard downspouts.

Clean, Functional Finish: The smooth metallic surface provides a professional, industrial look suitable for residential, commercial, and industrial buildings.



PVC Ball Valve









20mm | 25mm | 32mm | 40mm | 50mm

Gray PVC Ball Valve

Stop Valve 2-Way, PVC Pipe Connector

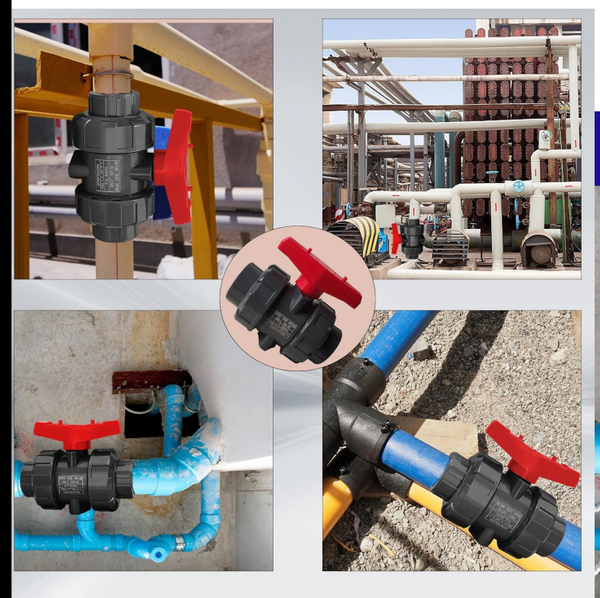





Drainage Channel,

Floor Channel,
Patio Channel

Colour	**Black**
Material	**Plastic** / A15 1.5T
Shape	**Rectangular**











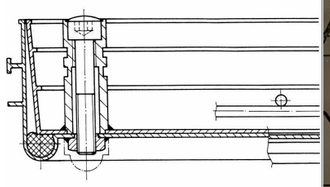

Manhole Cover

Manhole covers are essential access solutions designed to protect underground utility systems while ensuring safe and convenient entry for inspection, maintenance, and repairs. They are widely used in roads, sidewalks, industrial areas, and residential developments.

Key Features

- High Strength & Durability – Manufactured from ductile iron, cast iron, steel, or composite materials to withstand heavy loads.
- Safety & Security – Prevents accidental falls and unauthorized access, with optional locking mechanisms.
- Anti-Slip Surface – Textured patterns enhance safety in wet and high-traffic conditions.
- Corrosion & Weather Resistance – Designed for long-term performance in harsh environments.
- Precision Fit – Ensures stability, reduced noise, and minimal movement under load.

Applications

- Sewer and drainage systems
- Telecommunications and electrical networks
- Water supply and gas pipelines
- Municipal roads and highways
- Industrial and commercial facilities

Load Class Options

Available in multiple load ratings to comply with international standards:

- Light Duty – Pedestrian areas and landscaping
- Medium Duty – Sidewalks and parking areas
- Heavy Duty – Roads and highways
- Extra Heavy Duty – Airports, ports, and industrial zones

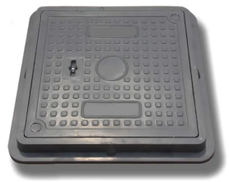

Customization Options

- Custom sizes and shapes (round, square, rectangular)
- Company logo or utility identification markings
- Hinged or lockable designs
- Galvanized or color-coated finishes









EASY INSTALLATION

Flexible for different surface materials

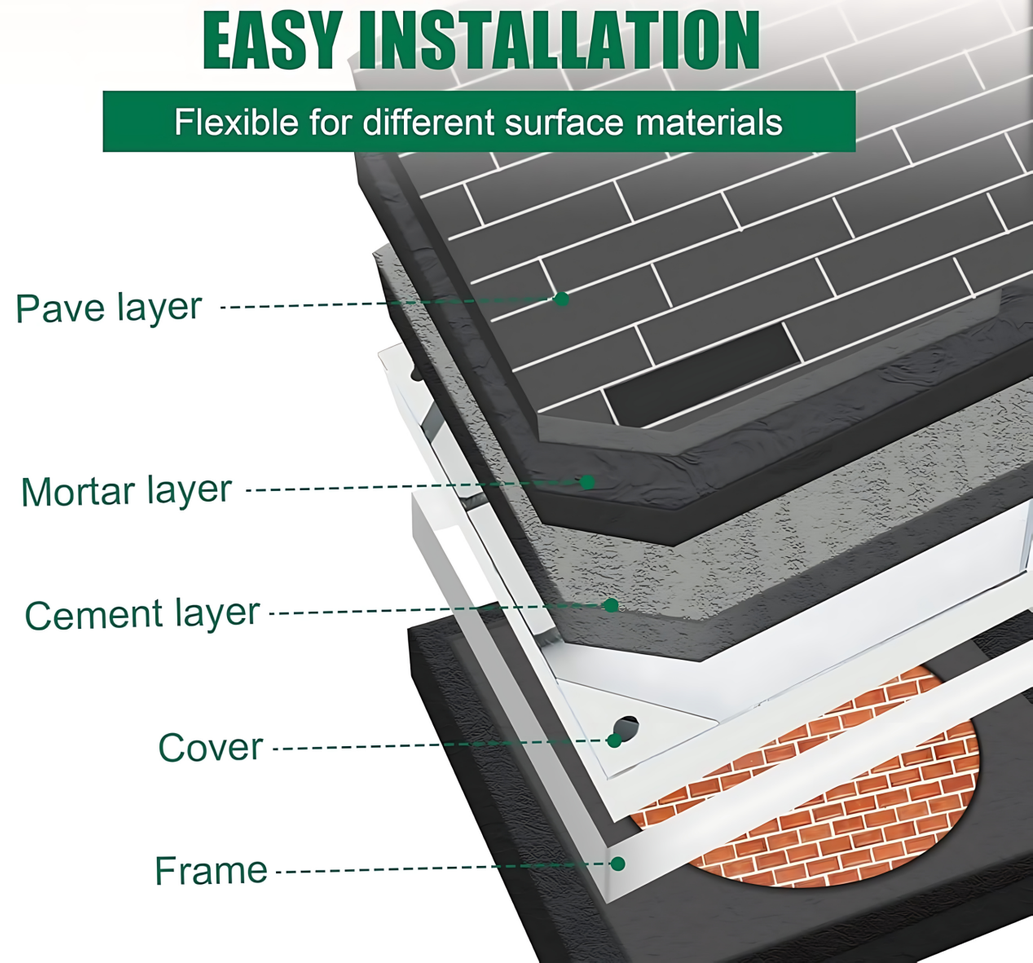

موزع معتمد للأنابيب

بصفتنا موزعًا معتمدًا للأنابيب،
نتخصص في توفير حلول أنابيب عالية الجودة لتلبية الاحتياجات المتنوعة لعملائنا.
نعمل مباشرةً مع كبرى الشركات المصنعة لتوفير مجموعة شاملة من الأنابيب
والوصلات والملحقات المصممة لتطبيقات متنوعة، من المشاريع الصناعية والتجارية إلى السكنية.

تشمل منتجاتنا أنابيب مصنوعة من مواد مختلفة،
مثل PVC وCPVC وHDPE وPPR، لتلبية احتياجات قطاعات مختلفة كالبناء والسباكة وغيرها.

لماذا تختارنا؟

نفخر بتقديم أنظمة أنابيب موثوقة ومتينة واقتصادية تضمن سهولة التركيب وأداءً طويل الأمد.
جودة معتمدة: بصفتنا موزعًا معتمدًا،

نضمن أن جميع المنتجات مطابقة لمعايير الصناعة ومشمولة بضمانات الشركة المصنعة.

تشكيلة واسعة: نقدم مجموعة متنوعة من أنواع وأحجام الأنابيب لتناسب جميع المشاريع.

دعم الخبراء: يقدم فريقنا إرشادات متخصصة لمساعدتك في اختيار
المواد والحلول المناسبة لاحتياجاتك الخاصة.

التسليم في الوقت المحدد: بفضل شبكة التوزيع الواسعة لدينا،
نضمن لك تسليمًا سريعًا وفعالًا،
مما يضمن سير مشروعك وفقًا للجدول الزمني المحدد.
سواء كنت مقاولًا أو مهندسًا أو صاحب منزل،

ثق بنا لتوفير أنابيب ووصلات عالية الجودة تلبي جميع احتياجاتك من أعمال الأنابيب.



موزع معتمد

Authorized Distributor for Pipes



As an Authorized Distributor for Pipes,
we specialize in supplying high-quality piping solutions to meet the diverse needs of our customers.

We work directly with leading manufacturers to provide a comprehensive range of pipes, fittings, and accessories designed for various applications, from industrial and commercial to residential projects.

Our product offerings include pipes made from various materials such as PVC, CPVC, HDPE, PPR, catering to different sectors like construction, plumbing, agriculture, and more. We pride ourselves on delivering reliable, durable, and cost-effective piping systems that ensure seamless installation and long-lasting performance.



Why Choose Us?

Certified Quality: As an authorized distributor,
we ensure all products meet industry standards and come with manufacturer warranties.



Wide Selection: We offer a broad variety of pipe types and sizes to suit every project.

Expert Support: Our team provides expert guidance to help you choose the right materials and solutions for your specific needs.

Timely Delivery: With our extensive distribution network,
we guarantee prompt and efficient delivery,
ensuring your project stays on schedule.

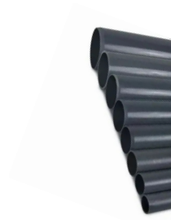

Whether you're a contractor, engineer, or homeowner,
trust us to provide high-quality pipes and fittings for all your piping needs.




OB
HTTPS://GROUP-OB.COM
LOCATION
AL-ULAYAN MARKET, AL-MADINAH
AL-MUNAWARAH RD, AZIZIYAH, JEDDAH 22324
+966 59 651 6677
WhatsApp